DRG.NO. **85Z/65XXXM**

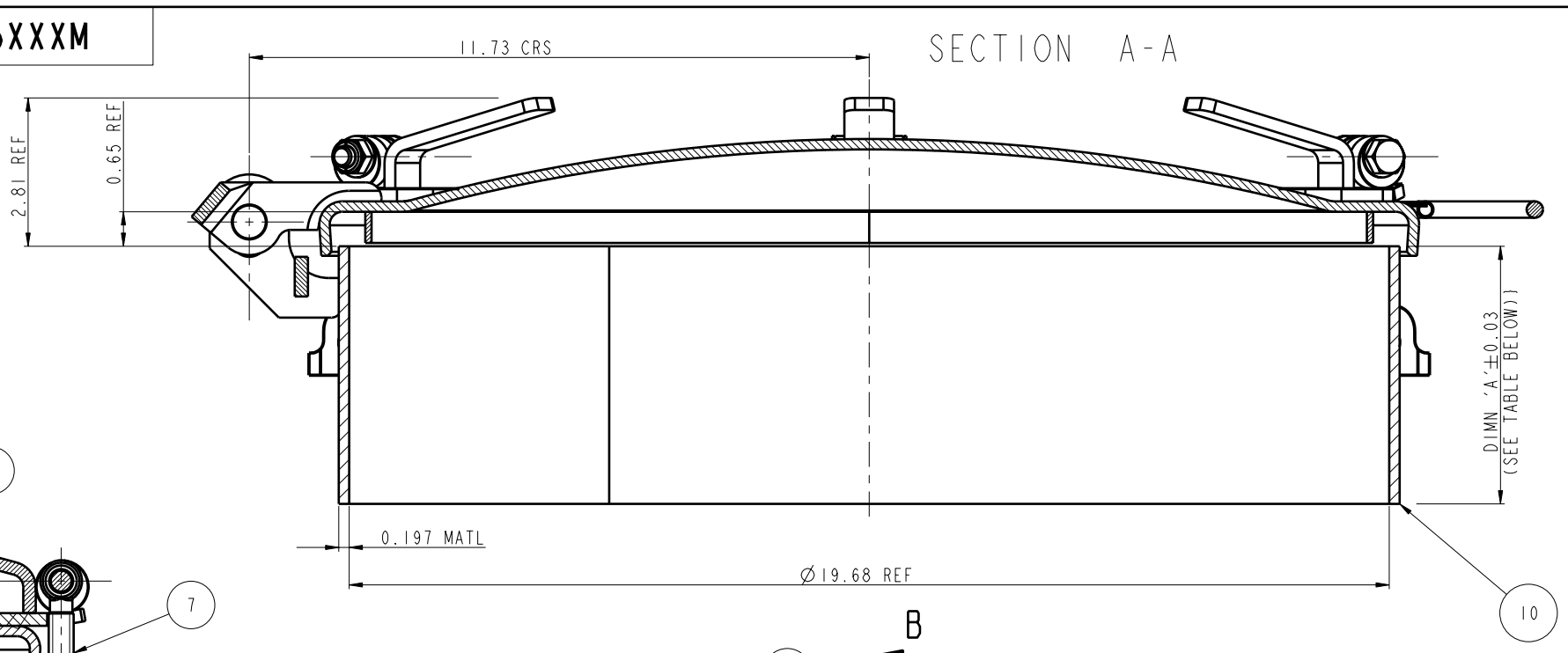

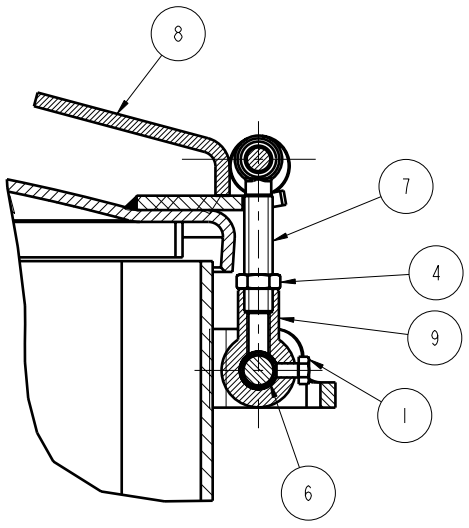

SECTION B-B

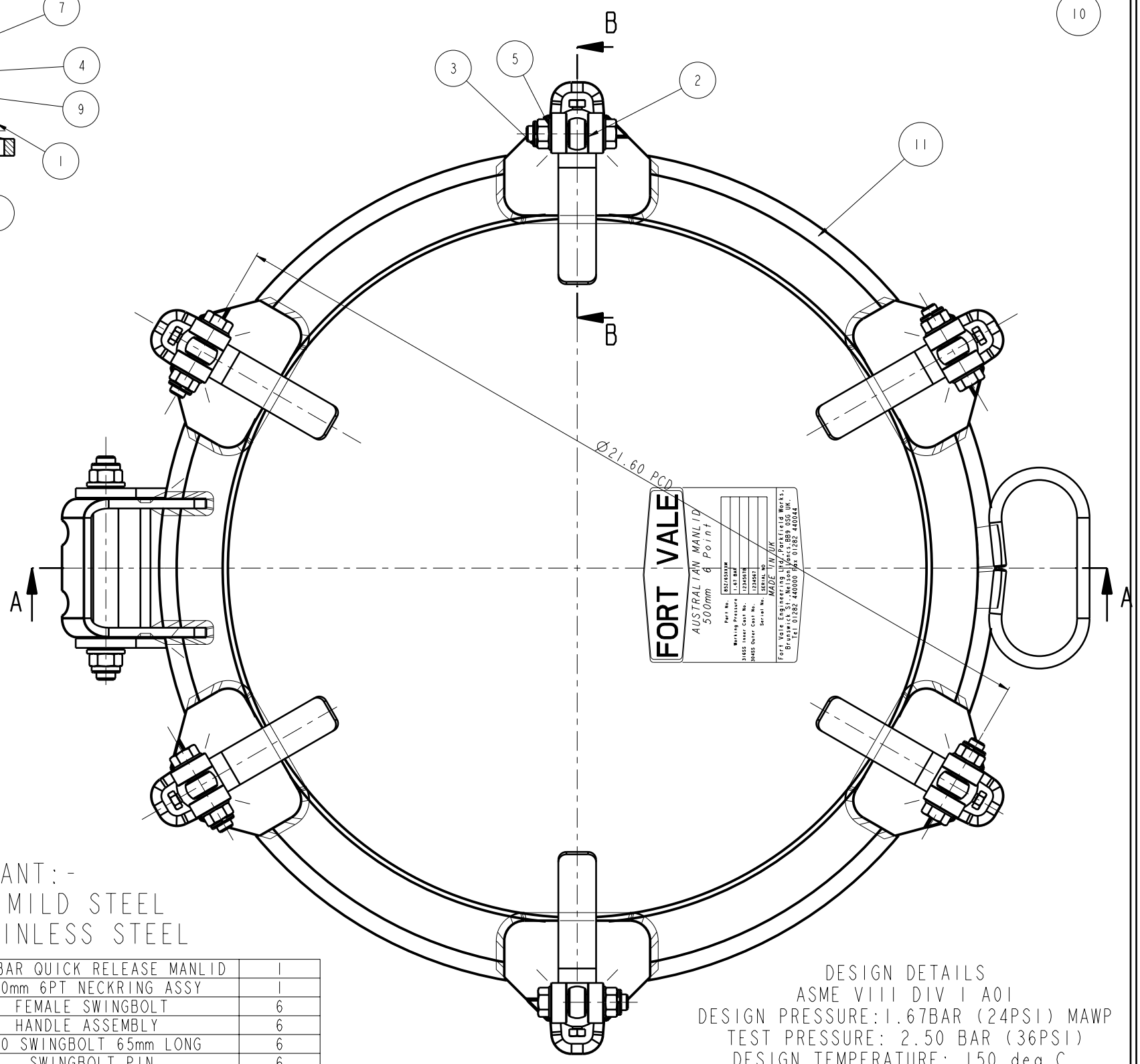

IMPORTANT:-
NECKRING IS MILD STEEL
MANLID IS STAINLESS STEEL

Index	Part Number	Description	Quantity
11	731/1685	1.67BAR QUICK RELEASE MANLID	1
10	665/65XXXM	500mm 6PT NECKRING ASSY	1
9	540/F136	FEMALE SWINGBOLT	6
8	490/4000	HANDLE ASSEMBLY	6
7	299/4125	M10 SWINGBOLT 65mm LONG	6
6	10913SS	SWINGBOLT PIN	6
5	5113-009	M10 PLAIN WASHER	12
4	5112-032	M10 HALF NUT	6
3	5112-008	M10 SELF LOCK NUT	6
2	5111-110	M10 x 50mm HEX BOLT	6
1	5111-006	M6 X 10mm HEX BOLT	6

Assembly BOM

DESIGN DETAILS
ASME VIII DIV 1 A01
DESIGN PRESSURE: 1.67BAR (24PSI) MAWP
TEST PRESSURE: 2.50 BAR (36PSI)
DESIGN TEMPERATURE: 150 deg C

ASSEMBLY PART NUMBER	NECKRING ASS'Y PART NUMBER	DIMN 'A'
85Z/65100M	665/65100M	3.94" [100.0]
85Z/65150M	665/65150M	5.91" [150.0]
85Z/65200M	665/65200M	7.87" [200.0]

FORT VALE
© Fort Vale Engineering Limited 2001
The information contained herein is the property of Fort Vale Engineering Ltd It is not to be copied, or divulged to any third party without the written permission of FORT VALE ENGINEERING LTD.

MODIFICATION

MATL.	316 STST & MILD STEEL
DRAWN	DJW
DATE	12-Oct-01
UNITS	IN
CHECKED	DVN 8249

FORT VALE ENGLAND USA NETHERLANDS

© FORT VALE ENG LTD 2002
BSI REGISTERED NUMBER FM 20165

UNLESS OTHERWISE STATED SURFACE FINISH 125 CLA
CORNER RADII 0.015" CORNER CHAMFER 0.03 x 45°

DESCRIPTION 500mm 6PT QUICK RELEASE LID/NECK

TYPE LOW PRESSURE QUICK RELEASE

DRG.NO. **85Z/65XXXM**

This drawing is issued to Kockums Industries. It is not to be copied or the information contaned hereon divulged to any third party without the written permission of FORT VALE ENGINEERING LTD. copyright FORT VALE ENGINEERING LIMITED Printed by Michael_Swindells on Tuesday, April 23, 2002 at 11:57:38 AM GMT